Data Sheet

Article number: 2301072771
Description: E+G Handwheel
VDS.150+IRS-A14

Measures

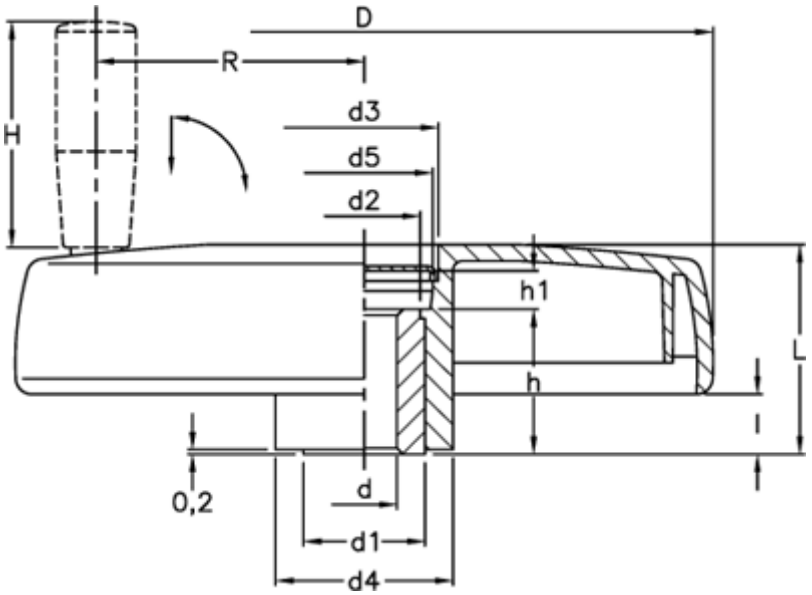

C (N m)	= 180	H	= 65
D	= 150	h	= 30
d1	= 26	h1	= 10
d2	= 24.0	l	= 12
d3	= 34.0	L	= 44
d4	= 38	L (J)	= 15
d5	= 30	R	= 58
d H7	= 14		

Product drawings and brochures of any kind may contain errors for which Brd. Klee A/S cannot be liable.